# ITER MAGNETICS: KEY DESIGN ISSUES

George Vayakis and the ITER International Team and Home Teams*

## 1. INTRODUCTION

The ITER magnetic diagnostic system provides the main electromagnetic parameters of the plasma (eg $I_p$, $V_{loop}$); the shape and position of the plasma boundary; key internal parameters (eg $\beta$, $l_i$); the vertical speed of the current centroid; and analysis of the amplitude and mode number of fluctuations from quasi-static to fast (100 kHz). A subset of these measurements is used for plasma current and shape control. The application of magnetics to a burning plasma experiment poses a number of new issues: (a) The high performance cost of any wasted volume or lost shaping capability means that measurement targets (Table 1) have to be very tight; (b) The requirement for long-term (> 20 year) reliability with none or little maintenance means multiple measurement backups are essential and a backup or repair strategy has to be defined and validated in the design stage; (c) The presence of a space-filling conducting blanket in front of the sensors means that eddy currents have significant effects on physics and control - relevant time scales (a few ms); (d) In addition to the standard requirements for insulator breakdown resistance and frequency response and the issues of lifetime under irradiation, sensors and their wiring have to be optimised to fit within the limited volume, to have negligible radiation-induced errors and to dissipate the considerable nuclear heating; (e) the long-pulse targets imply that the sensors –and their wiring– have to provide high signal to noise signals and low drift integrators must be used. This paper summarises the extent to which these issues have been solved. Remaining R&D issues are highlighted.

## 2. KEY DESIGN ISSUES

**Reliability and Redundancy:** For the position, shape and speed measurements, there are two independent groups of sensors. The first, mounted on the inside surface of the vessel and in the divertor, has a built-in redundancy of 2, achieved by two independent sector pairs of equilibrium coils, each cancelling n = 1 and, together by appropriate summation, n = 2. These sets are combined with a set of 6-fold toroidal symmetry coils to

* George Vayakis, ITER NAKA JWS, 801-1 Mukouyama, Naka, Ibaraki 311-0193, Japan.

*Advanced Diagnostics for Magnetic and Inertial Fusion*, Edited by Stott *et al.*
Kluwer Academic/Plenum Publishers, New York, 2002

measure independently n = 2 mode activity, and two independent sets of 3-fold toroidal symmetry divertor coils. The second group, mounted between the vessel skins in a more benign environment, can correct any slow drifts of the inner group, albeit with reduced accuracy. For all sensors, reliability is assured by the choice of tough materials, such as mineral insulated cable (MIC), for the coil construction. Of the two in-vessel sets, one is permanent, without connectors to the feedthrough. The second can be replaced (Figure 1), in this way guarding against common-mode failure of the sensor. The divertor coils are replaceable. Other measurements, have similar levels of redundancy.

**Table 1.** Measurement targets for the magnetics.

| MEASURE-MENT | PARAMETER | COND-ITION | RANGE/ COVER AGE | ΔT or ΔF | ΔX or Δk | ACCURACY (2 σ) |
|---|---|---|---|---|---|---|
| 1. Plasma Current | $I_p$ | Default | 0 – 1 MA | 1 ms | Integral | 10 kA |
| | | | 1 – 17.5 MA | 1 ms | Integral | 1 % |
| | | $I_p$ Quench | 17.5 – 0 MA | 0.1 ms | Integral | 30 % + 10 kA |
| 2. Plasma Position and Shape | Main plasma gaps, $\Delta_{sep}$ | $I_p > 2$ MA, full bore | - | 10 ms | - | 1 cm |
| | | $I_p$ Quench | - | 10 ms | - | 2 cm |
| | Divertor channel location (r dir.) | Default | - | 10 ms | - | 1 cm |
| | | $I_p$ Quench | - | 10 ms | - | 2 cm |
| | dZ/dt of current centroid | Default | 0 – 5 m/s | 1 ms | - | 0.05 m/s (noise) + TBD % (absolute) |
| 3. Loop Voltage | $V_{loop}$ | Default | 0 – 30 V | 1 ms | 4 locations | 5 mV |
| | | $I_p$ Quench | 0 – 500 V | 1 ms | 4 locations | 10 % + 5 mV |
| 4. Plasma Energy | $\beta_p$ | Default | 0.01 – 3 | 1 ms | Integral | 5 % at $\beta_p$=1 |
| | | $I_p$ Quench | 0.01 – 3 | 1 ms | Integral | ~ 30% |
| 8. Locked Modes | $B_r$(mode) / $B_p$ | | $10^{-4}$ – $10^{-2}$ | 1 ms | (m,n) = (2,1) | 30 % |
| 9. Low (m,n) MHD Modes, Sawteeth, Disruption Precursors | Mode complex amplitude at wall | | TBD | DC – 3 kHz | (0,0) < (m,n) < (10,2) | 10 % |
| 21. Halo Currents | Poloidal current | In disruption | 0 – 0.2 $I_p$ | 1 ms | 9 sectors | 20 % |
| 22. Toroidal Magnetic Field | $B_T$ | | 2 – 5.5 T | 1 s | 2 locations x 2 methods | 0.1 % |
| 27. High Frequency Macro Instabilities (Fishbones, TAEs) | Fishbone–induced perturbations in B,T,n | | TBD | 0.1 –10 kHz | (m,n) =(1,1) | – |
| | TAE mode – induced perturbations in B,T,n | | TBD | 30 –300 kHz | n = 10 - 50 | – |

**In-vessel structure eddy current effects.** Compared to the target measurement intervals of Table 1, relatively long time scales are predicted for the poloidal (~ 7 ms) and toroidal (~10-20 ms) eddy current modes in the blanket modules. Their effect is a prompt increase of the signal measured by the poloidal field sensors and the in-vessel diamagnetic loop compensation coil, by excluding flux from the module. For reconstructions of the plasma and measurement of stored energy this effect can in principle be compensated after careful modeling. A preliminary study of the effect of the poloidal current eddies on the measurement of the vertical speed has shown that the slight lead term introduced by them is not detrimental to the speed control of the plasma.[1]

**Sensor layout optimisation,** ie selection of the number and locations of the sensors, is an iterative process. First results[1] indicate that the requirements of Table 1 can be met. Further studies are underway to quantify the degree of redundancy available.

**Sensor design optimisation:** Selection of the coil parameters was made by a multiple optimisation of coil construction parameters subject to performance constraints, for example frequency response and environmental constraints, such as space and radiation effects. For example, for the poloidal field coils, the coil effective area, NA, has to be above 0.25 turn $m^2$ in order to ensure sufficient S/N in the wiring and electronics; the coil should not arc ($E < 0.25$ MV / m) for field changes of the order 100 T / s ; the self-resonance frequency of the coil should exceed 10 kHz; Radiation Induced Conductivity (RIC) should affect the signal by less than 0.2 %. In addition, the coil diameter (including case) should be less than ~50 mm to match the blanket cut-out and the length should be less than 100 mm; space for connectors etc must be allowed. Other constraints are an even number of layers (cancel thermal gradient, reduce cross-field contribution); working temperature < 300° C (insulator); and a minimum bend radius of 2.5× the cable diameter.

**Radiation-induced Electromotive Force (RIEMF).** Nuclear radiation induces a current (~ μA) between the coil core and sheath. In the presence of asymmetries in coil construction, this can lead to a small but significant steady state voltage across coil terminals, despite the low coil impedance (~ Ω), if sufficient asymmetries are present. Scaling studies show that this voltage, when normalised to the desired output, varies little with construction parameters (size, number of turns etc.) once all the other constraints are included. The most recent tests with γ irradiation show that this asymmetric voltage is, at worst, tolerable and could be negligible. Further tests are planned.

**Integrator targets.** A summary of the integrator requirements for key sensors is shown in Table 2. By comparison, integrators have been made with equivalent drift after 3600 s of 0.1 mVs in the lab,[2] 1.9 mV s in semi-controlled environments[3,4] and 8.6 mVs connected to a tokamak during a pulse,[5] reflecting the difficulty of controlling noise pickup in a realistic machine environment. The target performance appears within reach.

## 3. OUTSTANDING ISSUES

Issues remain where technical solutions exist but the final design choice requires evaluation of the reliability risks, for example choice of wiring, installation and maintenance options. In-reactor RIEMF tests are planned. Detailed thermo-mechanical studies will be performed on all sensors. Finally, R&D on steady-state sensors has yet to validate a design meeting the ITER requirements; further work in this area is desirable.

## 4. REFERENCES


1. EU Home Team, Progress Report on the activity performed at CREATE, Report 31 May 1999 (unpublished)
2. K. Kurihara and Y. Kawamata, in: *17th IEEE / NPSS Symposium on Fusion Engineering Vol. 2*, (IEEE, 1997), p. 799.
3. S. Ali-Arshad and L. de Kock, Rev. Sci. Instrum. 64 (9), September 1993, p. 2679.
4. E. Strait et al, Rev Sci. Instrum. 68 (1), January 1997 p. 381.
5. K. Kurihara and Y. Kawamata, private communication.


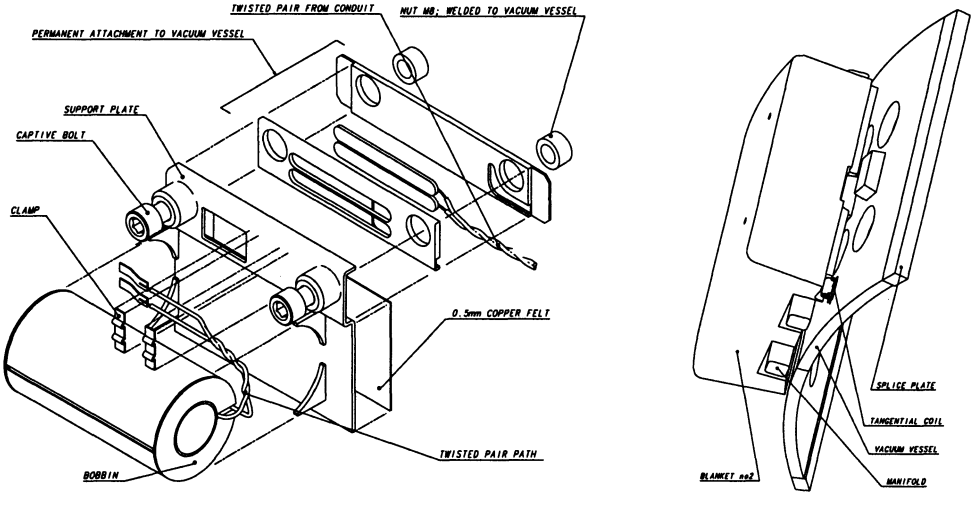


**Figure 1.** Exploded (left) and mounted (right) views of a replaceable poloidal field sensor.

**Table 2.** Summary of the integrator (digital and analog) requirements for key sensors

| **Sensor** | **Vessel coils** | | **In-vessel** | | | **External Rogowski** | **Diamagnetic loop** |
|---|---|---|---|---|---|---|---|
| Parameter | **Tan-genti al** | **Nor-mal** | **Partial Saddle Loop (+)** | **Tangenti al (&)** | **Nor-mal** | | **Compens-ation coil** |
| Peak Voltage (± V) | 7.1 | 3.0 | 5 | 27 | 0.79 | 20 | 59 |
| Maximum Flux (± Vs) | 2.4 | 1.0 | 1.7 | 0.35 | 0.27 | 10 | ~ 2 |
| Maximum Allowed Flux Error (± mVs) | 14 | 5.8 | 19 | 1.9 | 1.6 | 40 | 54 |
| Input offset control required (± μV) | 3.9 | 1.6 | 5.2 | 0.52 | 0.45 | 11 | 15 |
| Gain, ± 5V ADC | 0.70 | 1.7 | 1 | 0.19 | 6.4 | 0.25 | 0.085 |
| Noise at ADC input (μV/√Hz)* | 163 | 165 (97)* | 311 | 5.8 | 171 (27)* | 170 | 54 |
| Meas. rate (Hz) | 10 | 10 | 10 | $2 \times 10^3$ | 10 | 10 | $1 \times 10^3$ |
| Minimum effective ADC resolution | 13.4 | 13.5 | 12.5 | 14.5 | 13.4 | 13.3 | 11.3 |
| Noise at analog integrator (μV/√Hz) | 330 | 140 | 440 | 44 | 38 | 940 | 890 |
| Analog integrator time constant (s) | 0.5 | 0.2 | 1 | 0.064 | 0.054 | 2 | ~0.5 |

(*)where a preamplifier is necessary, the noise at the input of the integrator is shown in brackets.
(+) 1 / 30th of the area of a differential measurement is assumed (~ 1.67 m2). (&) includes divertor coils.