REQUIREMENTS AND ISSUES IN DIAGNOSTICS FOR NEXT STEP BURNING PLASMA EXPERIMENTS

Alan E Costley *

1. INTRODUCTION

Next step burning plasma experiments (BPXs) will require an extensive set of plasma and first wall measurements. The number and type of parameters that will have to be measured will be very similar to those measured on today's large devices, but the specification of some of the measurements, such as relative spatial resolution and accuracy, and the required reliability of the measurements, will be more demanding. Further, because of the harsh radiation environment, diagnostic system selection and design will have to cope with a range of phenomena not previously important in diagnostic design: for example, Radiation Induced Conductivity in magnetic sensors mounted in the vacuum vessel, and erosion of diagnostic first mirrors due to energetic particle bombardment. The diagnostic designs also have to satisfy stringent engineering requirements on tritium confinement, vacuum integrity, neutron shielding and remote handling maintainability. This combination of demanding measurement requirements and implementation difficulties constitutes a major challenge, arguably the most difficult challenge ever undertaken in magnetic fusion energy (MFE) diagnostics.

Since 1994, and under the frame of the ITER programme, the various aspects of the problem have been tackled in the preparation of diagnostics for ITER[1]. An extensive database of radiation effects on candidate diagnostic components has been established, and specific diagnostic components and some new diagnostic techniques have been developed[2]. Diagnostic designs have been advanced to the point where implementation of some systems could now begin[3,4]. The work has shown that in most cases it should be possible to meet the desired measurement requirements but not in every case. Where there are shortfalls there will be limitations in the information that can be obtained and possibly on plasma operation.

In this paper, the requirements for measurements are briefly reviewed and the difficulties arising from the harsh environment are outlined. Some examples of successful developments undertaken specifically for ITER are given. Key issues which are presently unresolved are identified and some potential solutions highlighted. Finally, comments are

* Alan Costley, ITER NAKA JWS, 801-1 Mukouyama, Naka, Ibaraki 311-0193, Japan.

Advanced Diagnostics for Magnetic and Inertial Fusion, Edited by Stott *et al.*
Kluwer Academic/Plenum Publishers, New York, 2002

made on the relative feasibility of implementing diagnostics on three current BPX contenders (ITER, FIRE and Ignitor).

2. REQUIREMENTS FOR PLASMA AND FIRST WALL MEASUREMENTS ON A BPX

As on existing machines, first wall and plasma measurements will be required on a BPX for machine protection, plasma control and physics evaluation. Key parameters which must be measured at a very high level of reliability for machine protection are the gap between the plasma edge and the first wall, first wall temperature, line-average density, halo currents and disruption precursors (particularly the detection of locked modes). For machines with divertors, it is also necessary to measure the divertor plate surface temperature, fusion power, and edge localised mode (ELM) type.

For plasma control, the principal measurements made on existing machines will also be needed; plasma shape and position, plasma current, and the spatial profile of the electron density (n_e). A burning plasma operating close to operational limits will also require additional control measurements: for example, plasma beta (β), total radiated power, fuelling ratio n_T/n_D, plasma rotation and helium ash concentration. Key measurements in the divertor will also be needed – in particular the position of the ionisation front must be determined. The kinetic control must also keep the plasma away from the β and density limits and provide sufficient power flow through the separatrix to ensure H-mode plasma operation. This leads to requirements for a range of additional plasma measurements for control. These include the radiative power loss from the plasma core, scrape off layer (SOL), X-point and divertor regions, and the plasma density profile, β, n_T/n_D ratio, rotating MHD modes and n_e and the electron temperature (T_e) at the divertor plates. It is clear that a sophisticated multi-input, multi-actuator feedback control scheme is required for successful operation.

For operating scenarios exploiting advanced high confinement modes, for example reverse shear and optimised shear, control and hence measurement of the spatial profile of key parameters such as the current density, pressure and rotation are likely to be required. For sustained operation near the β limit, suppression of neoclassical tearing modes (NTMs) will probably be needed. Similarly, for steady-state operation at β levels above the ideal limit (without a conducting wall) stabilization of the resistive wall modes (RWMs) will be required. Measurements of the location, phase and amplitude of these modes are therefore required.

The BPX plasma will be the first in which there is significant alpha particle heating, so the experimental program will have an extensive explorative physics component. Key topics to be investigated include energetic alpha particle effects, confinement and transport, MHD, and the physics of the divertor and the boundary. Important required measurements are the energy and number density of confined alphas with space and time resolution, the energy and number density of escaping alphas, MHD modes, the T_e and n_e profiles with high spatial resolution in the edge and in the region of the internal transport barriers, and measurements of the helium ash and other light impurities. Measurements of the amplitude and correlation length of fluctuations are needed in tests of theories and models of transport.

Table 1. Plasma and First Wall Measurements required for a BPX (ITER)

GROUP 1a Measurements For Machine Protection and Basic Control	GROUP 1b Measurements for Advanced Control	GROUP 2 Additional Measurements for Performance Eval. and Physics
Plasma shape and position, separatrix-wall gaps, gap between separatrixes	Neutron and α-source profile	Confined α-particles
Plasma current, q(a), q(95%)	Helium density profile (core)	TAE Modes, fishbones
Loop voltage	Plasma rotation (toroidal and poloidal)	T_e profile (edge)
Fusion power	Current density profile (q-profile)	n_e, T_e profiles (X-point)
$\beta_N = \beta_{tor}(aB/I)$	Electron temperature profile (core)	T_i in divertor
Line-averaged electron density	Electron density profile (core and edge)	Plasma flow (divertor)
Impurity and D,T influx (divertor, & main plasma)	Ion temperature profile (core)	$n_T/n_D/n_H$ (edge)
Surface temp. (div. & upper plates)	Radiation power profile (core, X-point & divertor)	$n_T/n_D/n_H$ (divertor)
Surface temperature (first wall)	Z_{eff} profile	T_e fluctuations
Runaway electrons	Helium density (divertor)	n_e fluctuations
'Halo' currents	Heat deposition profile (divertor)	Radial electric field and field fluctuations
Radiated power (main pla, X-pt & div).	Ionization front position in divertor	Edge turbulence
Divertor detachment indicator (J_{sat}, n_e, T_e at divertor plate)	Impurity density profiles	MHD activity in plasma core
Disruption precursors (locked modes, m=2)	Neutral density between plasma and first wall	Pellet ablation
H/L mode indicator	n_e, T_e of divertor plasma	
Z_{eff} (line-averaged)	Alpha-particle loss	
n_T/n_D in plasma core	Low m/n MHD activity	
ELMs	Sawteeth	
Gas pressure (divertor & duct)	Net erosion (divertor plate)	
Gas composition (divertor & duct)	Neutron fluence	

Studies of the macroscopic stability of a burning plasma involve the investigation of the complex internal coupled processes which will determine the profiles of the pressure, current density and rotation. The stabilization of NTMs and RWMs will be required for the highest performance. Modes that lock can lead to a disruption and so should be measured preferably when they are small.

The global issue to be addressed in studies of the boundary is that of the burning core – plasma boundary interaction. Specific topics will include transport in the SOL, ELMs and edge stability, and the L – H threshold. In the divertor, key topics will be the ELM power handling capability, impurity screening, particle pumping, dissipation of core power efflux, erosion/redeposition and tritium retention. Many measurements will be required to support the study of these topics including measurements of n_e and T_e with high time and spatial resolution, radiated power, divertor helium density and impurities. Measurements of the temperature of the divertor plates and, for long pulse operation, erosion of the plates will also be required. The composition, quantity and location of dust may also have to be determined.

The parameters that will have to be measured are listed in table 1 and categorised according to their role in machine protection and basic plasma control (group 1a), advanced control (group 1b) and physics studies (group 2).

3 ENVIRONMENT OF A BPX: KEY RADIATION EFFECTS

Clearly, from the point of view of implementing diagnostics, the principal difference between a BPX and present-day MFE devices is the environment in which some of the key diagnostic components will have to be installed and operate. The flux levels of all the potentially damaging and influencing radiations - neutrons, gammas, photons and particles - will be higher and in some cases by one or two orders of magnitude. Moreover the pulse lengths will be tens to hundreds of seconds and possibly steady state, and so these conditions will have to be endured for much longer than on present machines. The precise conditions will depend on the BPX and on the diagnostic design.

These high levels of radiation mean that diagnostic selection and design has to cope with a wide range of phenomena not previously important in diagnostic design (figure 1). For example, under gamma irradiation the conductivity of ceramic insulators is enhanced due the generation of charge carriers within the bulk material (Radiation Induced Conductivity (RIC)). This has to be taken into account in the design of all diagnostics which employ cables inside the vacuum vessel, for example magnetics. Similarly, it has been observed that when insulated cable is irradiated a small current can flow between the core and the sheath due the phenomenon of Radiation Induced EMF (RIEMF). This is especially important in the design of coils used to determine the plasma shape and position by measuring the magnetic fields. If there are asymmetries in the coil, this effect can lead to a differential voltage which could lead to an error in the measurement. Both effects have to be dealt with by careful design[5].

For many diagnostics, the plasma facing optical element is a mirror, and the lifetime of these first mirrors is a key parameter. The high levels of energetic neutral particle flux can give rise to erosion. Extensive experimental work has shown that in situations where erosion will be the dominant potentially damaging mechanism it will be possible to design

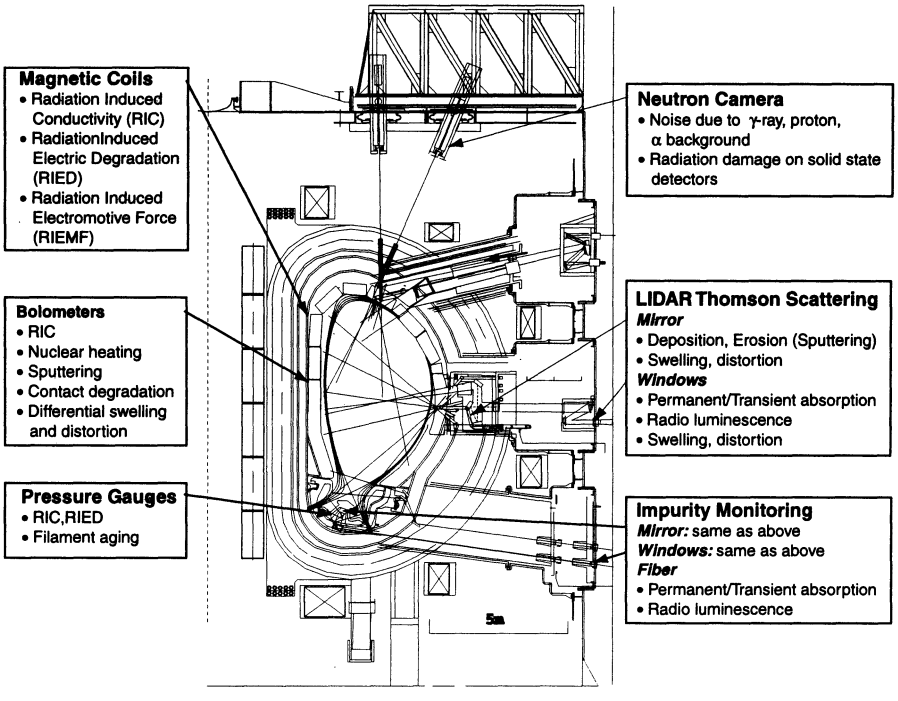

Figure 1. ITER: Location of some representative diagnostic components and the principal, radiation induced, physical effects of interest.

mirrors with an adequate lifetime but the material has to be carefully chosen[6]. On the other hand, erosion of the first wall or viewing ducts can lead to deposition of materials on the mirrors. This can also lead to a significant reduction in the reflecting properties and effectively a shortening of the mirror lifetime. Possible mitigating methods include installation of shutters and baffles and cleaning techniques such as laser ablation and discharge cleaning.

Many diagnostics employ refractive optical materials, for example fused silica in optical windows, and under irradiation by neutrons and gammas two effects can occur: absorption and radioluminescence. The absorption has two components: a permanent component and a prompt component. Radioluminsecence can generate a signal which can compete with the signal being measured especially when the latter is relatively low, for example in Thomson scattering diagnostics. Optical fibres are a very convenient means of transporting the radiation and can simplify the diagnostic design. However, since the length of the fibre is long these radiation induced optical effects can be more severe and limit the application of the fibres.

Other effects can also be important. For example, surface heating due to the plasma radiation and bulk heating due to neutron absorption. The nuclear absorption can also cause dimensional changes and material transmutation. All these effects have to be carefully taken into account in the diagnostic design.

4. THE ITER DIAGNOSTIC SYSTEM: THE MOST DEVELOPED EXAMPLE OF BPX DIAGNOSTICS

The most developed BPX diagnostic system design is that which has been prepared for ITER[3,4]. It is a comprehensive system comprising about 40 individual measurement systems largely based on existing tokamak diagnostics but with appropriate selection of materials and designs to cope with the harsh environment and the special requirements for diagnostic implementation. While the design of individual systems are at different stages of development, representative systems of all the main types of diagnostics - magnetics, neutron, optical, bolometric, spectroscopic and microwave - have been developed to the point where the key problems have been found and design solutions developed . In the designs, steps are taken to minimise the adverse effects of the environment and to produce the necessary diagnostic performance and component lifetime. For example, the magnetics diagnostic utilises mineral insulated cable, which has been the subject of extensive R&D and the radiation effects are well known, and the coils and loops are installed behind the blanket shield modules thereby giving some protection from the radiation fluxes (figure 2). With this design the level of gamma and neutron fluxes experienced by the key components are typically no higher than those already experienced on JET and TFTR, although of course the pulse length will be much longer.

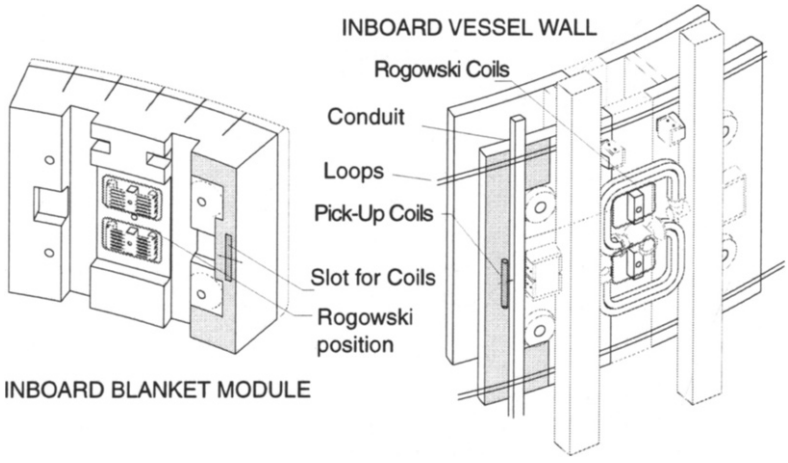

Figure 2. Some magnetic diagnostic components installed behind the blanket shield modules.

Optical designs incorporate shielding labyrinths. In these, mirrors are used to fold the optical paths and the latter is embedded in material which absorbs the radiation (figure 3). The most critical diagnostic component is usually the first mirror and, as explained above, by carefully selecting the materials an adequate lifetime can be obtained. At the diagnostic window, the radiation levels are relatively low and generally not higher than

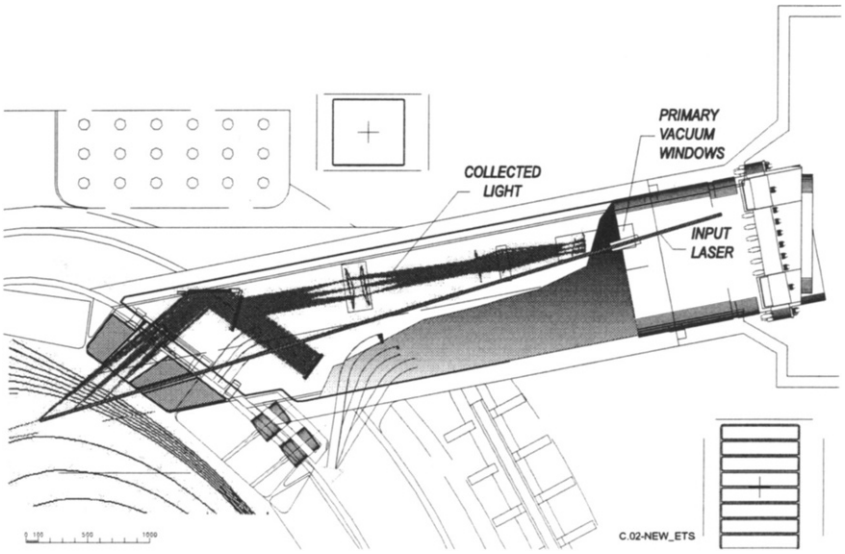

Figure 3. The front end of the edge Thomson scattering system showing the laser line to the last element supported from the diagnostic block, and collection optics / raytrace to the first vacuum boundary (courtesy P Nielsen, Consorzio RFX, Padova).

those already experienced on JET and TFTR. Microwave diagnostics also employ shielding labyrinths with waveguide transmission lines incorporating several bends.

Some spectroscopic systems, however, require a direct vacuum coupling and for these shielding labyrinths and windows cannot be employed. Examples are VUV and X-ray crystal spectroscopy. The neutral particle analyser (NPA) also requires a direct coupling. In these cases, special provisions have to be made to deal with the neutron and gamma radiation. For example, in the X-ray crystal spectrometer a graphite reflector is employed to deviate the radiation by a few degrees so that the detector is not exposed to the direct neutron and gamma fluxes. The NPA device employs a high voltage accelerator to increase the signal relative to that due to the neutron background[7]. Bolometers also have to view the plasma directly and for this application special radiation hard bolometers are being developed[8].

5. KEY OUTSTANDING ISSUES

While good progress has been made, further developments are needed in order to be able to bring the measurements to the point where all the requirements can be met. There are several key areas in the radiation effects work that need further development. An unexpectedly high asymmetric voltage was measured in tests with a prototype magnetic coil apparently due to the phenomenon of RIEMF. However, a recent re-examination of the results suggests that there were problems with the long pulse integrator used in the tests, and/or other sources of voltage, for example thermoelectric effects, and further tests

are required. While first mirror designs resistant to erosion exist, for mirrors in the divertor region and possibly in ducts, deposition is likely to be the limiting mechanism and potential cleaning and mitigating methods (baffles and shutters) need to be developed. It is believed that there are window solutions for most diagnostics. However, for systems employing high power lasers, even a small amount of absorption can be serious and more accurate measurements of radiation induced prompt absorption are needed. Significant inconsistencies have been found in tests on optical fibres and need to be resolved.

Key sensors requiring development include compact steady state magnetic sensors, compact efficient neutron detector/spectrometers, and radiation hard bolometers and soft X-ray detectors. In each case candidate sensors exist but development work is required before devices suitable for installation on a BPX can be selected.

To solve some of the measurement problems, new techniques are required. For example, techniques are needed to measure the confined and escaping alpha particles[9], divertor plate erosion, dust and re-deposited layers. In other cases existing techniques appear to be very difficult to implement under BPX conditions and new techniques are highly desirable. Examples are measurements of the plasma position and shape under long pulse (steady state conditions), measurements of the light impurities and especially the Helium ash, and measurements of the internal electric field. In yet other cases techniques have been identified which could make measurements of an important parameter simpler. A good example is Fast Wave Reflectometry which could make measurements of the fuel mix ratio, n_T/n_D, with spatial and temporal resolution but requires development. The hardware is very simple and application on a BPX can be easily envisaged.

Active charge exchange recombination spectroscopy (CXRS) for the measurement of light impurities, ion temperature and plasma rotation requires a conventional neutral beam but this is a high cost item and requires significant space and power. A short pulse intense beam would require less power and space and would give an improved diagnostic performance but requires development.

As the diagnostic designs develop the need for R and D in certain areas becomes apparent. It is important that there is a close interaction between design and R&D.

6. IMPLEMENTATION ON DIFFERENT BPX CONTENDERS

The feasibility of implementing diagnostic systems on a BPX depends on several aspects but especially on the access and the environment. Three current BPX contenders, ITER, FIRE and Ignitor, differ substantially in these two aspects.

All three have large ports at the mid-plane and so good diagnostic access can be expected at this level. However, ITER also has large ports at the upper level. This gives access for many diagnostics including views of the diagnostic neutral beam for CXRS, views of the divertor for spectroscopy, views of the first wall which combined with views from the midplane give a high surface coverage. Further, they give the possibility of installing diagnostics for edge measurements which can take account of the natural flux expansion at this level to achieve high spatial resolution. According to current designs both FIRE and Ignitor have small diameter, long, vertical ports. On a BPX, optical systems have to use reflective optics close to the plasma (because there are no sufficiently radiation hard optical materials for refractive optics), and in narrow tubes it is not possible

to achieve high optical throughput. If there is the additional requirement to include shielding in the tubes, the possible optical throughput will be very low. Hence, the vertical ports on FIRE and Ignitor will be of limited use for viewing or collection systems but may be of use for input laser beams.

At the divertor level access is restricted and the lifetime of diagnostic components is potentially limited. Both FIRE and ITER have to provide diagnostics at this level. In the case of FIRE a duplicate set will be needed at both the upper and lower divertor levels. This requirement, combined with the absence of large upper ports, makes FIRE a relatively difficult machine for diagnostic implementation.

The first wall neutron flux on both FIRE and Ignitor is approximately five times higher than on ITER. Moreover neither of these machines has a blanket and so in-vessel diagnostic components and sensors will be subjected to the unattenuated first wall flux. On ITER, diagnostic components will be installed in the gaps between blanket shield modules or behind the modules giving an attenuation of a factor of 10 – 100. The radiation levels on FIRE and Ignitor will therefore be 50 – 500 times higher and so the prompt radiation effects will be more severe. Nuclear heating will also be much higher leading to high operating temperatures of the diagnostic components and/or to a requirement for active cooling.

It is clear that the problems and solutions of implementating diagnostics on a BPX will be machine specific. The diagnostic designs must therefore be developed in close association with the machine design. A fully integrated approach is required.

7. SUMMARY

The combination of demanding measurement requirements and the harsh environment means that the preparation of diagnostics for a BPX will be a major challenge. There is a good basis of experience and knowledge that has been gained on existing machines and this is being supplemented within the ITER framework with dedicated design and R&D, but the step to be made remains substantial. Solutions to many of the measurement requirements have been developed but some key requirements, for example measurements of confined and escaping alpha particles, remain unresolved and must be the focus of future work. The multiple diagnostic/machine interfaces mean that the development of the design of the diagnostic systems must be closely integrated with the machine design. Similarly, there must be a tight coupling between the design and the supporting R&D. The environment and access for diagnostics is different for three different BPX contenders - ITER, FIRE and Ignitor - and this will have a substantial impact on the diagnostic system selection and design.

8. ACKNOWLEDGEMENTS

It is a pleasure to acknowledge useful discussions and input from the members of the ITER Expert Group on Diagnostics, A J Donne, Y Kusama, A Krasilinkov, A Kislyakov, F Orsitto, T Nishitani, T Sugie, and S Strelkov, and from colleagues in the ITER Joint Central Team, particularly K Ebisawa, G Vayakis, C Walker and S Yamamoto.

Contributions from S Kasai, A Malquias, V Zaveriaev of the Japanese, European and Russian Home Teams respectively are also gratefully acknowledged.

9. REFERENCES

1. Chapter 7: Measurement of Plasma Parameters' ITER Physics Expert Group on Diagnostics and ITER Physics Basis Editors, Sect. 3.3.4; Nucl. Fusion Vol. 39, 2559 (1999).
2. A E Costley, D J Campbell, S Kasai, K E Young, and V Zaveriaev, 'ITER R&D Plasma Diagnostics', Fusion Engineering and Design, Vol 55, 331 (2001).
3. K Ebisawa et al, Rev of Sci. Instrum., Vol. 72, No 1, 545 (2001).
4. 'Technical Basis for ITER Final Design Report', to be published by the IAEA in the ITER EDA Documentation Series, IAEA, Vienna (2001)
5. G Vayakis, this conference
6. V Voitsenya, this conference
7. A.I.Kislyakov, V.I.Afanassiev, A.V.Khudoleev, S.S.Kozlovskij and M.P.Petrov, in 'Diagnostics for Experimental Thermonuclear Fusion Reactors 2', ed. P.E. Stott, G. Gorini, and E. Sindoni, Plenum Press, New York, p.353 (1998).
8. R Reichle, this conference
9. K E Young, this conference